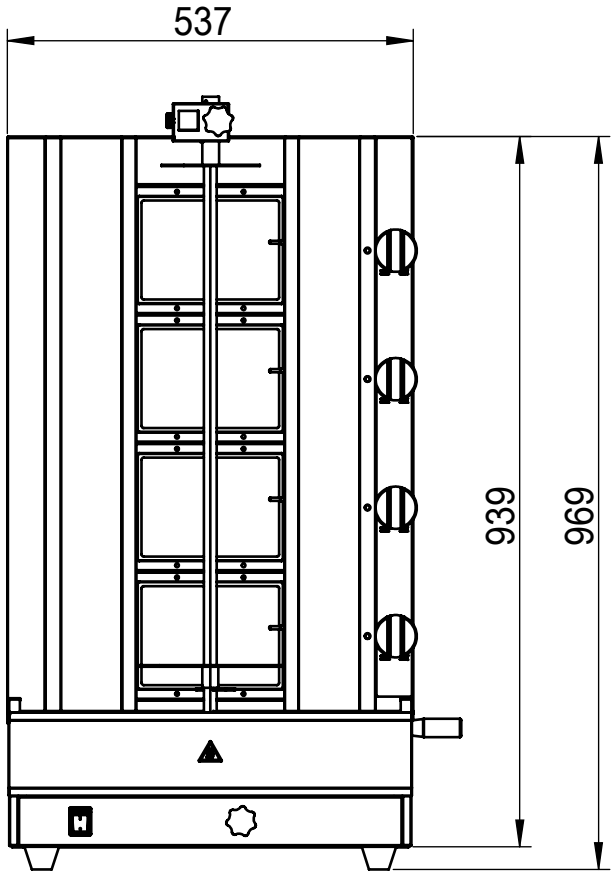
537
939
969

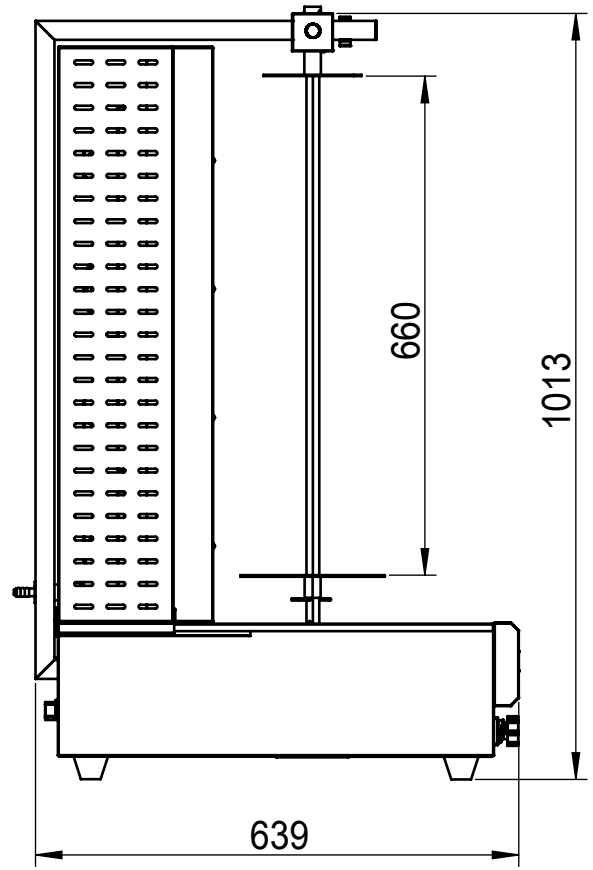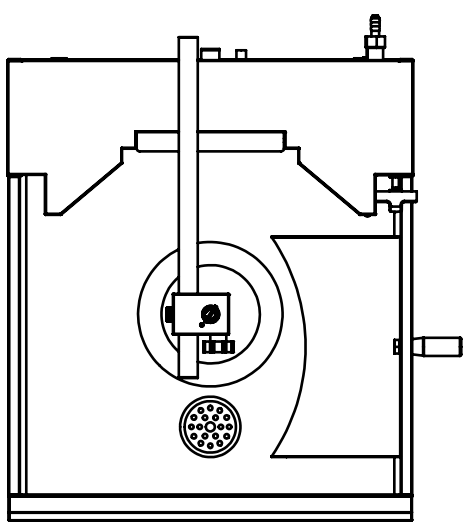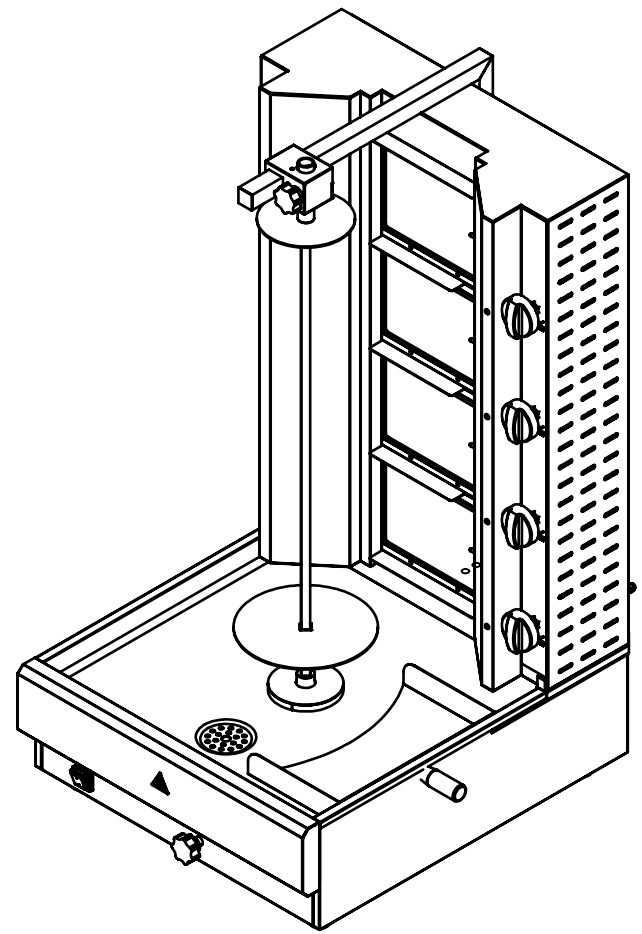
660
1013
639