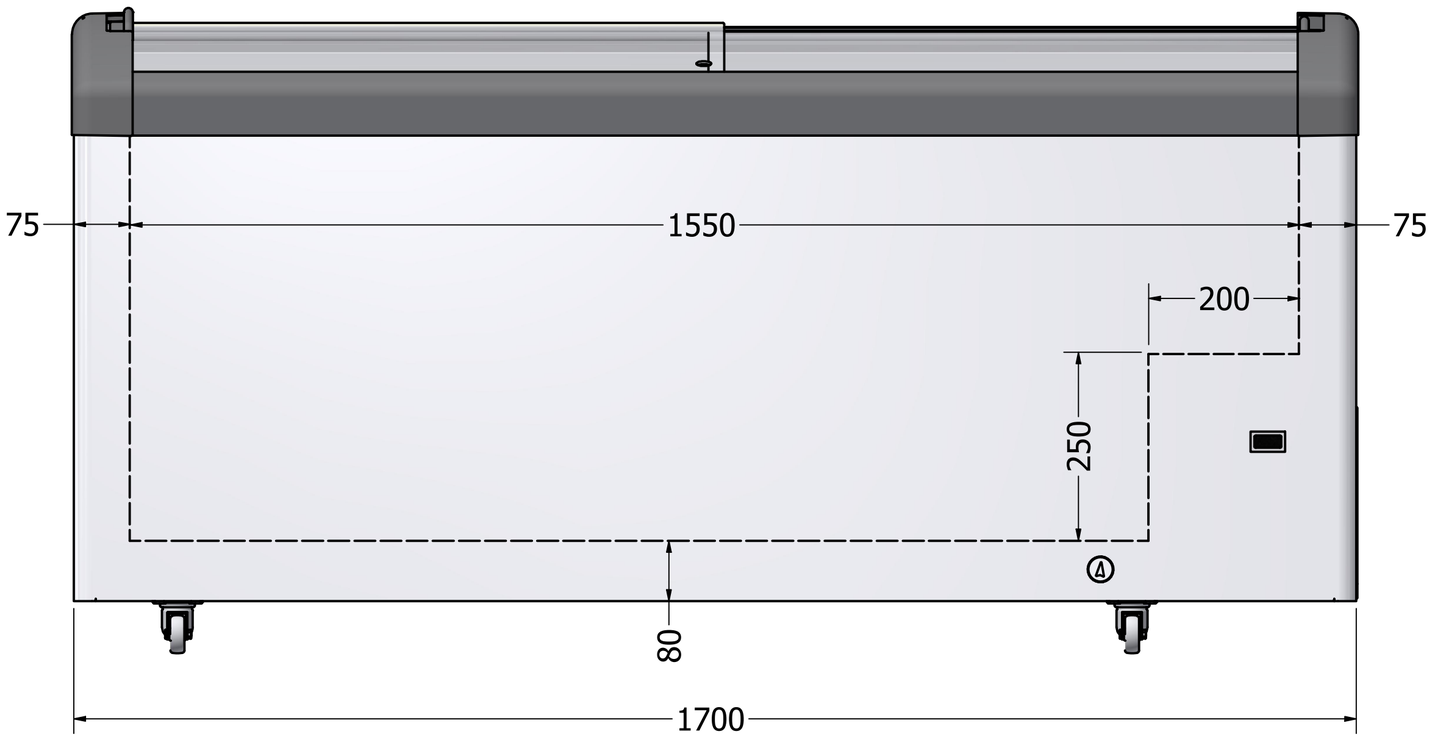

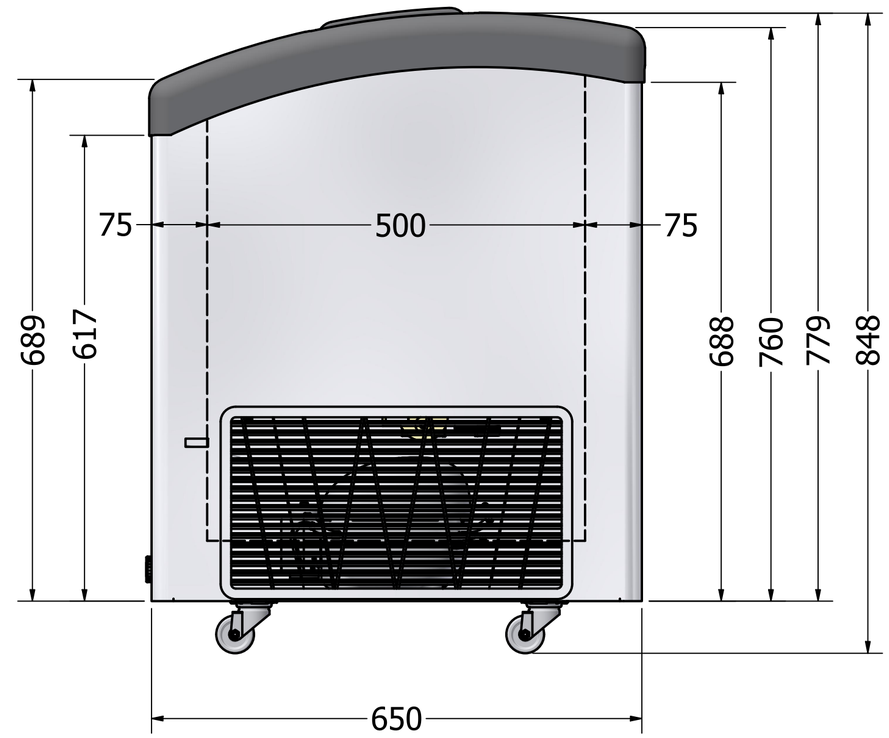

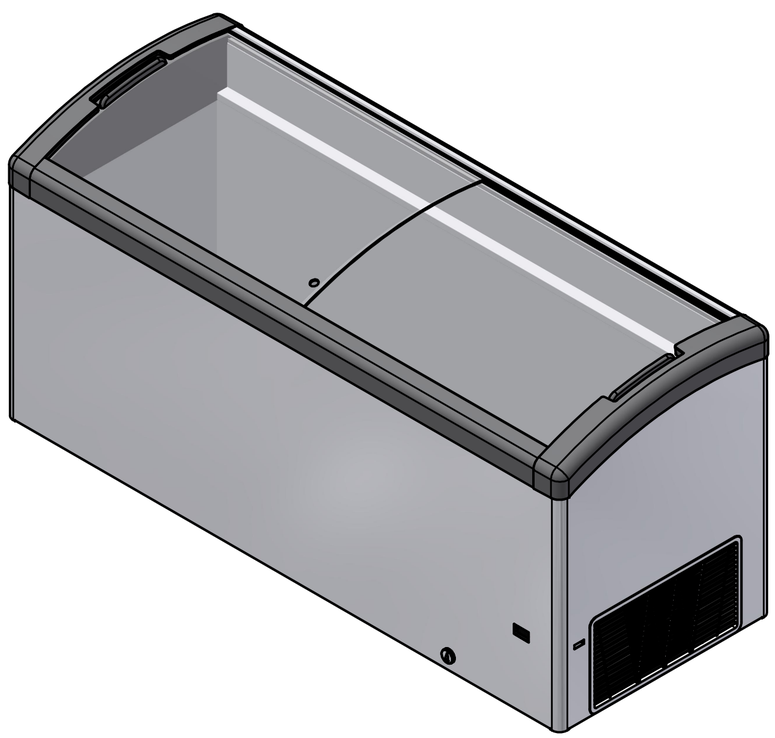

TEFCOLD®