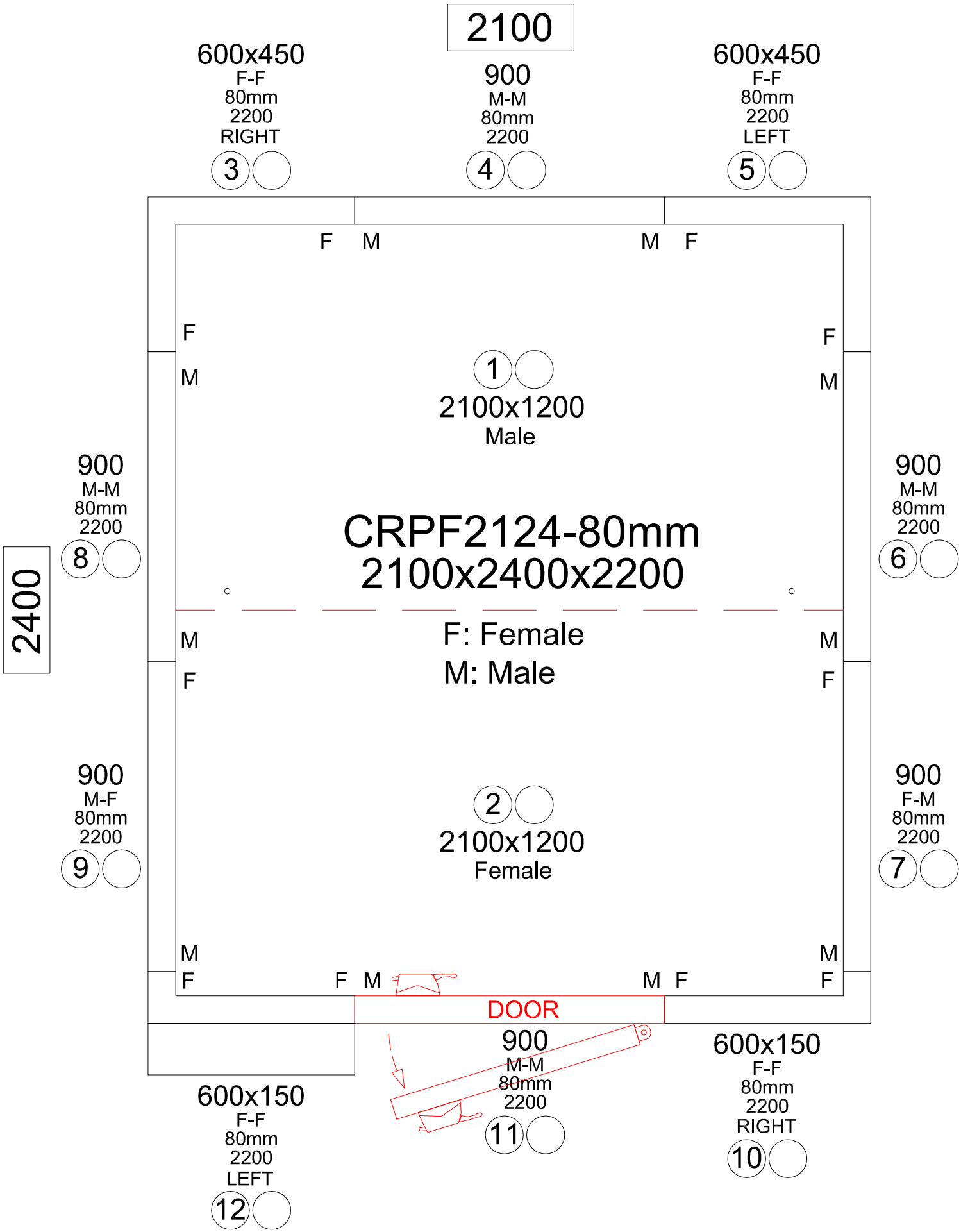
2100
600x450
F-F
80mm
2200
RIGHT
3
900
M-M
80mm
2200
4
600x450
F-F
80mm
2200
LEFT
5
F M
M F
F
M
F
M
1
2100x1200
Male
900
M-M
80mm
2200
8
900
M-M
80mm
2200
6
2400
CRPF2124-80mm
2100x2400x2200
F: Female
M: Male
M
F
M
F
900
M-F
80mm
2200
9
900
F-M
80mm
2200
7
2
2100x1200
Female
M
F
M
F
F M
M F
DOOR
900
M-M
80mm
2200
11
600x150
F-F
80mm
2200
RIGHT
10
600x150
F-F
80mm
2200
LEFT
12

TEFCOLD